DOI: https://doi.org/10.67656/njmse.2021.rlwp16c6

Daniyan et al.: Nigerian Journal of Materials Science and Engineering. Vol. 11(1):20 - 28 (2021)

Development of an *Indigeneous Potentiostat* for Corrosion Application

*Daniyan, Ayodele Abeeb; Ige, Oladeji Oluremi; Umoru Lasisi Ejibunu; Adeleke, Bunmi Benjamin; Obanla, Oluwaseun Solomon; Ojetokun, David Oluwasayo and Adegbite[1], Timothy Olanrewaju.

Department of Materials Science and Engineering, Obafemi Awolowo University, Ile-Ife.
[1]Department of Electronics and Electrical Engineering, Obafemi Awolowo University, Ile-Ife.

*Corresponding author: daniyan03@gmail.com

Abstract

In this study, a Potentiostat was developed for teaching and research purposes because Potentiostats are expensive equipment and are of high importance in corrosion monitoring due to its various applications. The fabrication of this potentiostat entailed the use of electronic devices and components, including operational amplifiers in the control circuit. A microcontroller was used to send data from the circuit to the computer system, and the results obtained were visualized in real-time on a software application, made with Python programming language and Tkinter (a library for desktop application development) installed on the computer system. The software application uses linear regression (an algorithm in machine learning) to calculate the slope of the anodic and cathodic curve, which are used to obtain the corrosion rate. This study proffers solution to some of the shortcomings of locally-made potentiostats, which are unable to plot corrosion data in real-time and determine anodic and cathodic slopes needed to obtain the corrosion rate, while still being affordable for teaching and research purposes.

Keywords: Corrosion, Potentiostat, Microcontroller, Operational Amplifier, Potentiodynamic Behaviour.

1. INTRODUCTION

Corrosion testing means the processes carried out in laboratories in order to find solutions, mitigate or prevent corrosion related problems (George, 2013). These tests can give important and helpful information for different tasks, such as the design and development of new coatings and materials and the choice of methods that will be used for the protection of the new and old equipment. Service history is the most dependent indication of corrosion behaviour. The information is barely available just as required, and therefore other tests are needed, starting from simple field trials to extremely high accelerated laboratory tests. The necessity to get information that are more than the service history is what brings about complexity into the testing of corrosion. The knowledge of the corrosion characteristics of the candidate materials is very important for materials selection purposes. In most practical usage of materials, such knowledge can be acquired from the experience of the material in service, which usually includes long-term exposure under frequently harsh and ill-documented conditions, and corrosion testing (Ijseling, 2017).

However, due to the fact that the corrosion mechanism of a system is dependent on many variables, corrosion testing itself has many problems. Frequently, tests are designed to study definite types of corrosion or specific applications. Uniform corrosion is the least disturbing in this respect. However, tests that are related to localized corrosion are far from being perfect. The adverse and destructive effects of corrosion have become a problem of great concern in the engineering sector. This has brought about the interest in research into the reaction of metals with its environment and the means of preventing the damaging effects of corrosion on metals. Since some corrosion reactions are electrochemical in nature and their rates depends not only on the concentration and temperature of the corrosive media involved but also on potential, therefore, potentiostats can be used in many electrochemical experiments to monitor the rate of corrosion.

Potentiostats, which are foundation of electrochemistry research, have seen limited application in teaching laboratories of developing countries. One of the major significant reason is the cost, at which laboratories and industries have to pay which is in the range of $1000 USD to $10,000 USD and above for procurement of potentiostats (Aremo, 2015).

Potentiostat circuits could be found implanted in different gas sensors, electrical/ electronic “tongue” in the food manufacturing industries and ecological monitoring equipment. Therefore, the need for embedded potentiostat circuits are bound to be of immense value, and this has motivated the development of affordable potentiostats that ignore the complexity of the commercial ones, while retaining major functionalities. A field-portable, low-foot print potentiostat was presented (Sekunowo, 2015), while a do-it-yourself machine that finds application in wide

range of electrochemical exploration has been reported (Oluwole, 2014).

Potentiostat, as an electronic device is made up of operational amplifier that control the voltage between the working electrode and that of the reference electrode to a unvarying value, while passing current through the Counter electrode. The reference electrode gives a stable reference potential and it does not allow current to pass flow through it, the counter electrode provides sufficient current to the electrolyte to keep the potential between the reference and working electrode at the preferred voltage. Some reference electrodes that are common include the silver/ silver chloride and the saturated calomel electrode (SCE), the platinum electrode is used as counter electrode and is best suitable for use in the laboratory.

2. METHODOLOGY

2.1 The Potentiostat System:

The Figure 1 shows the layout of the potentiostat system. The microcontroller (PIC) was programmed using the C++ programming language, for data acquisition and sending the measured voltage and current to the software on the computer. The two quad operational amplifiers are responsible for signal conditioning, and are supplied with 0 -5 V from the power source. The level converter is a RS232 module (Recommended Standard 232) for serial communication of data.

2.2 Description of the circuit modules

1) The Operational Amplifiers:

The operational amplifiers used have two inputs and one of the inputs is non-inverting while the other is an inverting input. Operational amplifiers work in such a way that if a voltage is passed into the non-inverting input, an amplified voltage of the same sign as the one fed in is produced and if a voltage is passed into the inverting input an amplified voltage of different sign as the one fed in is produced. The working electrode is connected to the non-inverting input (+), the reference electrode is connected to the inverting input (-) and the counter electrode is connected to the output.

2) The Power Supply Source:

This section as shown in Figure 2, comprises of the power transformer, the junction diodes, some fixed resistors and electrolytic capacitors which are connected to guarantee an efficient and reliable power supply to other sections as shown in the complete potentiostat circuit (Figure 3). The 220V from the AC power mains is stepped down by the transformer to 18V and the 18V is rectified from AC to DC and thereafter reduced to 5V.

3) The Microcontroller:

A Microcontroller is a digital device that operates on digital information; It therefore, has an Analog-To-Digital converter (ADC) that converts analog input (voltage or current) into a digital value that can be read by a microprocessor. The microcontroller's 10 bit ADC used in this project reads voltage at a resolution (the smallest voltage change that can be measured by the ADC) as small as 4.88 mV which is approximately 5mV. The resolution was obtained as follows:

Resolution = 5V (System Voltage)/ 2^{10} = 4.88 mV

2.3 The Graphical User Interface

Figure 4 shows the Graphic User interface (GUI) created with Python programming language and Tkinter (a library for desktop application development). It shows the result when the application IS tested with corrosion raw data, the application processes the data so as to give the anodic and cathodic curves. Therefore, the application was able to plot corrosion data in real time, derive the slopes of the anodic and cathodic plots, and thereafter determine the Icorr, Ecorr and corrosion rate.

The potentiodynamic experiments were conducted through a three-electrode cell connected to the fabricated potentiostat and the software designed was used for the collection and analysis of results. A silver/silver chloride electrode was used as a reference to measure and control the working electrode potential across the electrochemical interface and a platinum electrode as counter electrode which passes all the current needed to balance the current observed at the working electrode. The scan rates used for the experiment are 10mv/s and 15mv/s. All measurements were taken at room temperatures using the 0.09 M HCl solution, 1M NaOH solution, 3.5% and 3.65% NaCl solutions. Tafel extrapolation was used to determine the corrosion potential (E_{corr}), corrosion current (I_{corr}) and the corrosion rate.

3. RESULTS AND DISCUSSION

The results obtained are illustrated in form of graphs, tables, figures etc.

Table 3 shows the values for the different E_{corr}, I_{corr} and corrosion rate of mild steel in 0.09M HCl solution, 1M NaOH solution, 3.5% and 3.65% NaCl solution.

The critical polarization dynamics of mild steel in HCl, NaOH and NaCl solutions are shown in Figures 5 - 12. The figures illustrate the linear polarization response of mild steel in 0.09M HCl solution, 1M NaOH solution, 3.5% and 3.65% NaCl solutions. The negative part of the graph represents the typical cathodic behaviour in line

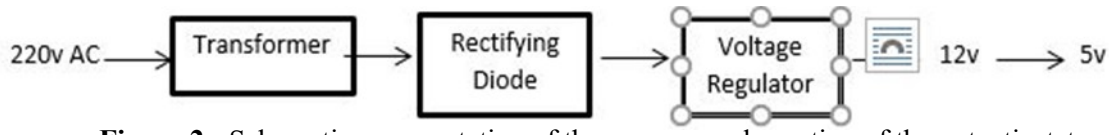

Figure 2: Schematic representation of the power supply section of the potentiostat

with Tafel curves while the positive part of the graph represents the anodic behaviour.

The electrochemical nature of corrosion observed from our experiment can be illustrated by the attack on iron by the aqueous solutions, which led to the formation of rust. The basic anodic reaction that occurred was the dissolution of iron and the subsequent release of ions into the solution.

$Fe \quad Fe^{2+} + 2e^{-}$

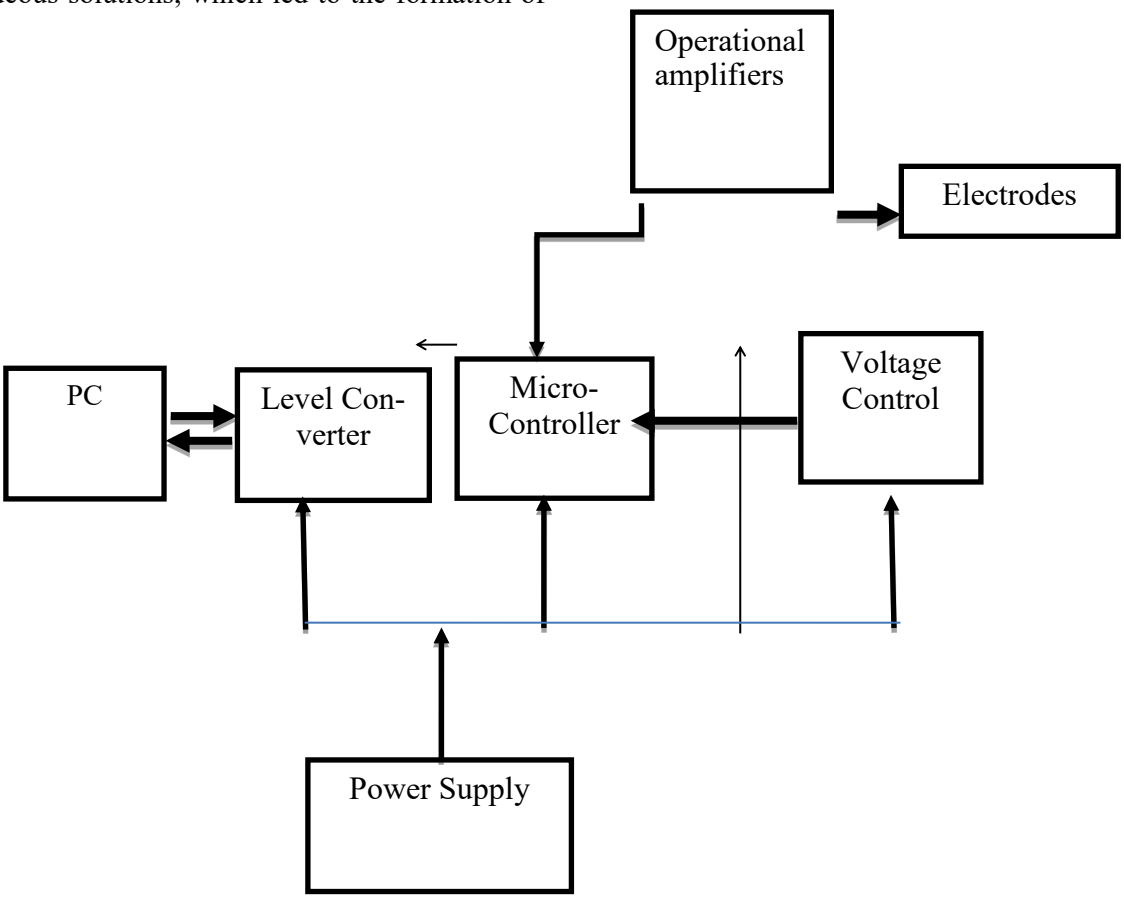

Figure 1: Schematic block diagram of the Potentiostat

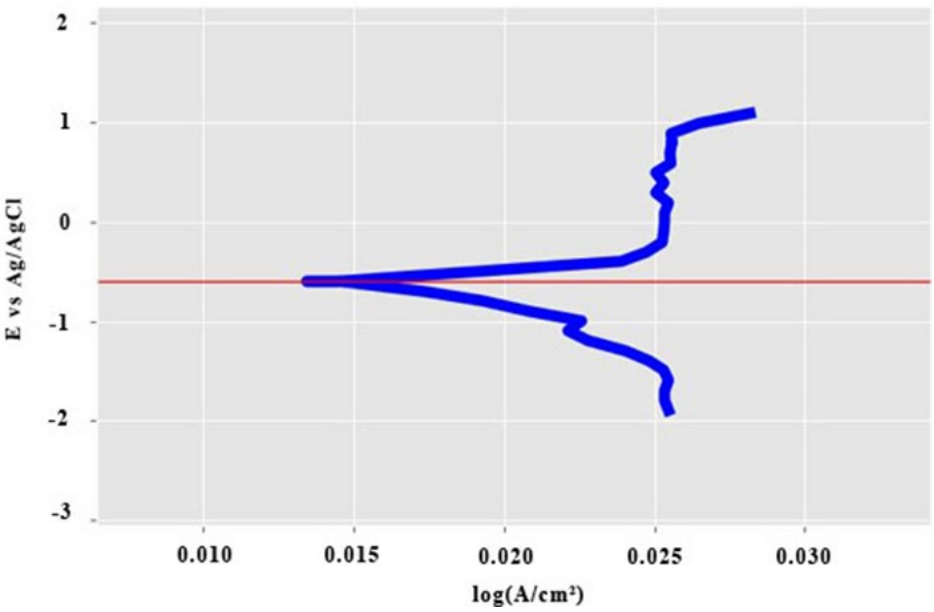

Figure 5: Potentiodynamic polarization behaviour of mild steel in 0.09M HCl, at scan rate of 10 mv/s (Fabricated potentiostat)

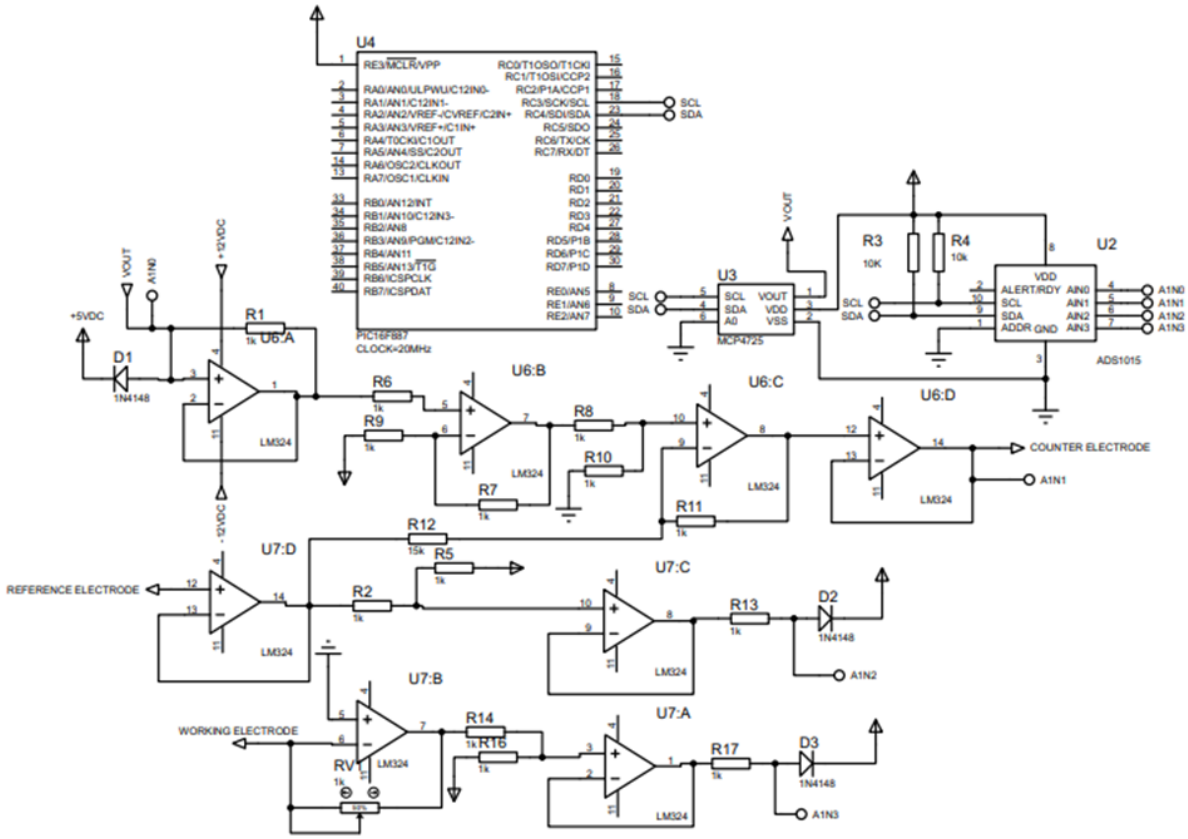

Figure 3: The complete potentiostat circuit

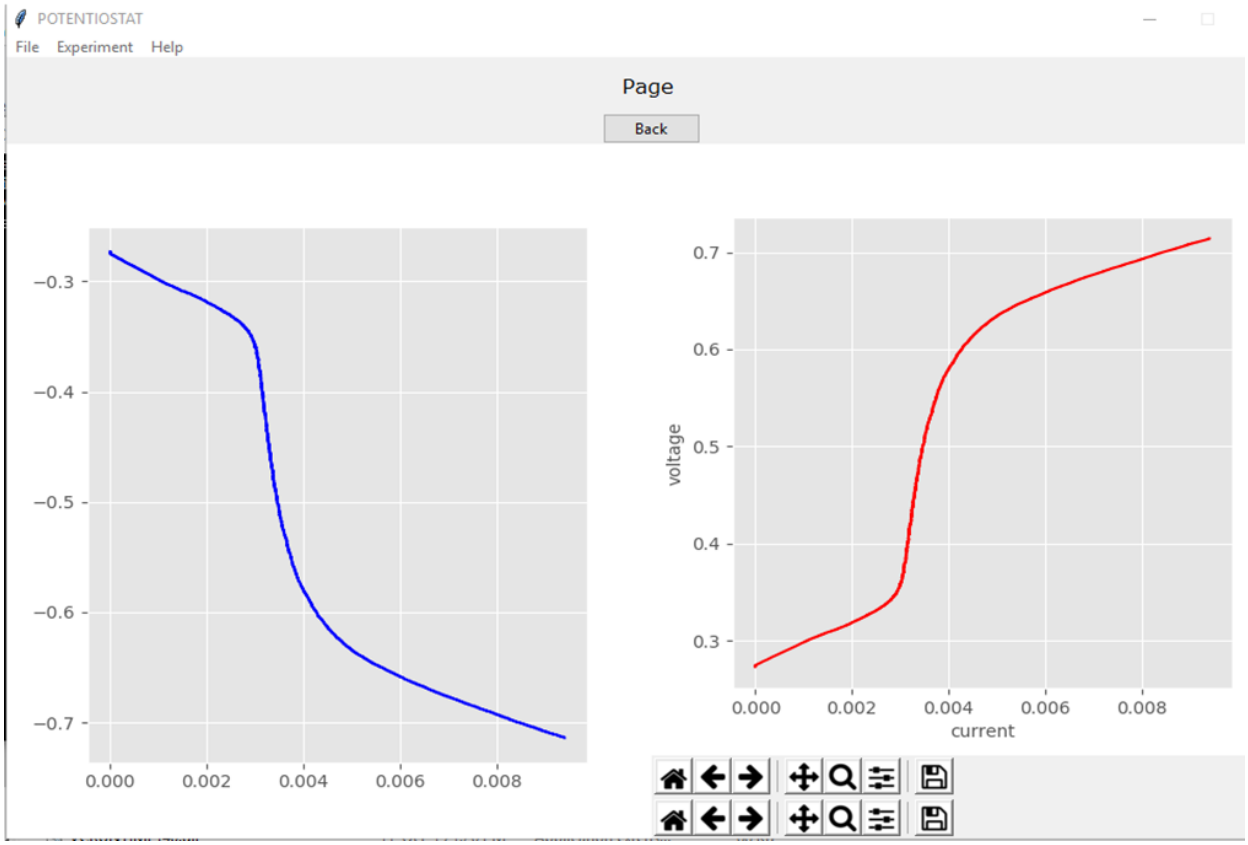

Figure 4: The Graphical User Interface created with python programming Language and Tkinter (Library for desktop app development)

The basic cathodic reaction that occurred involved the evolution of hydrogen gas, As the iron corroded, more hydrogen ions were observed to be consumed.

$2H^+ + 2e^- \rightarrow H_2$

The behaviour of the samples in the test environments is very similar to that, which was reported by Liu *et al.* (2015), and Maji*et al* (2006), they both reported passivation of aged shape memory alloys in acidic solution and no passivation when the alloys were tested in NaCl solution.

From Table 3, it can also be observed that the corrosion rate of HCl is higher than NaOH and NaCl, due to the aggressive nature of acid. It can also be observed that the corrosion rate of NaCl decreases with increase in concentration because, with increasing in salt concentration corrosion will initially increase due to increase in electric con-

	Scan Rate	Icorr (A/cm^2)	Ecorr (V)	Slope$_{anodic}$	slope$_{cathodic}$	$R_p(\Omega)$
HCl (0.09M)	10 mv/s	0.0117	-1.3327	0.236	-0.46	5.78
	15 mv/s	0.0134	-1.1432	0.621	-0.599	9.86
NaOH (1M)	10 mv/s	0.0235	-0.2902	0.874	-2.151	11.51
	15 mv/s	0.0236	-0.3885	1.652	-1.485	14.37
NaCl (3.65%)	10 mv/s	0.0243	-0.4309	3.282	-3.188	28.9
	15 mv/s	0.0245	-0.244	3.657	-3.521	31.83
NaCl (3.5%)	10 mv/s	0.0244	-0.2493	1.726	-8.859	25.75
	15 mv/s	0.0245	-0.2274	2.142	-9.916	31.16

Table 3: Polarization data extrapolated from Tafel slope for mild steel in HCl, NaOH and NaCl solution from the fabricated potentiostat.

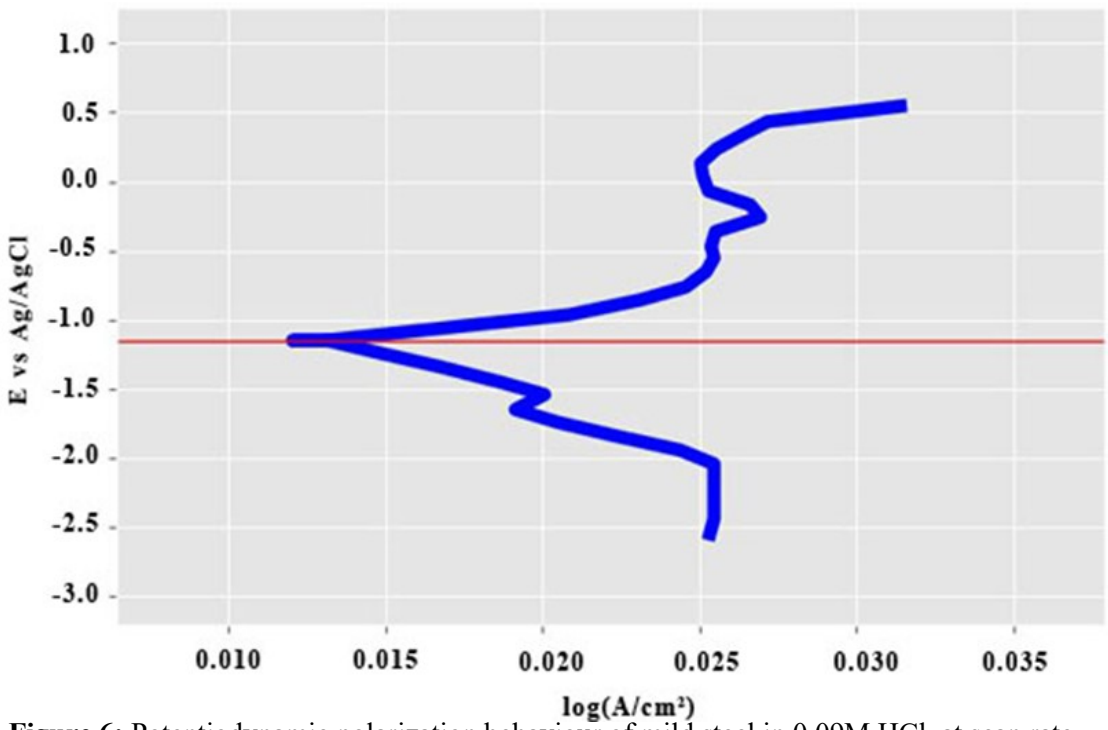

Figure 6: Potentiodynamic polarization behaviour of mild steel in 0.09M HCl, at scan rate of 15 mv/s (Fabricated potentiostat)

ductivity while at higher salt concentration the corrosion rate will decline owing to the decrease in the solubility and the diffusion rate of oxygen (Pierre, 2015).

The results obtained from Figures 5 – 12 of the Tafel extrapolation for mild steel exposed in HCl, NaOH, and NaCl medium at different concentrations and scan rates of 10 mV/s and 15 mV/s reveal that the point of intersection of the I_{corr} and $E_{corr,}$ shows an equilibrium between the cathodic and anodic reaction. The result obtained from Figure 5 of the Tafel extrapolation for mild steel exposed in 0.09M HCl environment at a scan rate of 10mv/s, re-

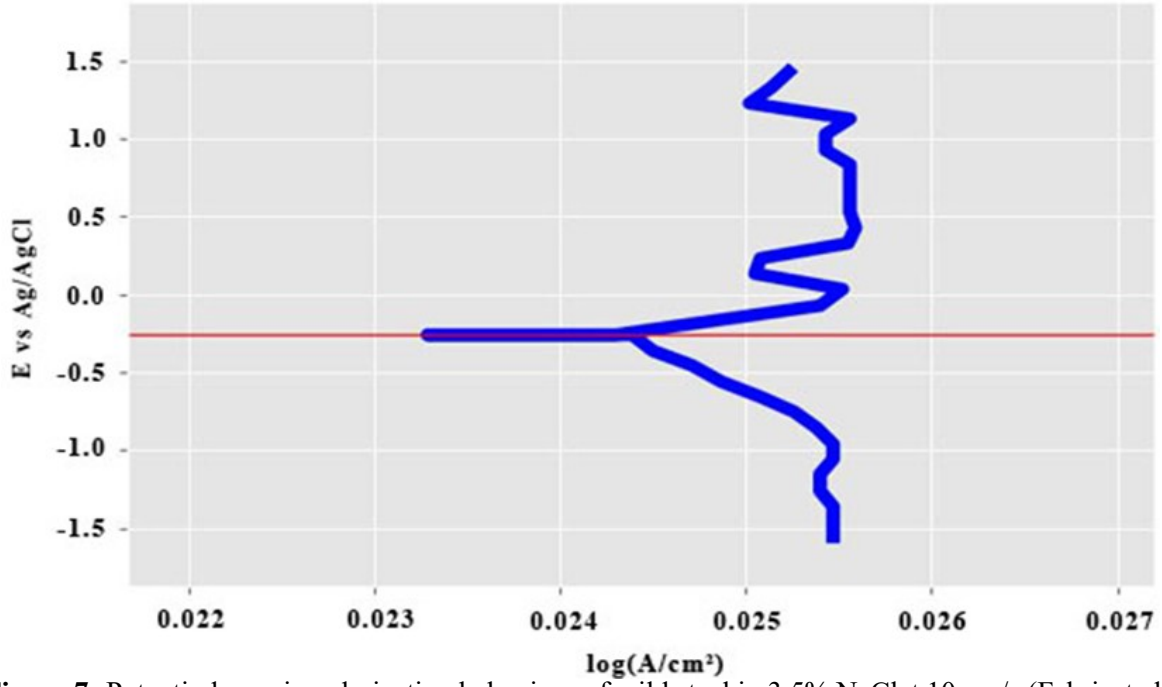

Figure 7: Potentiodynamic polarization behaviour of mild steel in 3.5% NaClat 10 mv/s (Fabricated potentiostat).

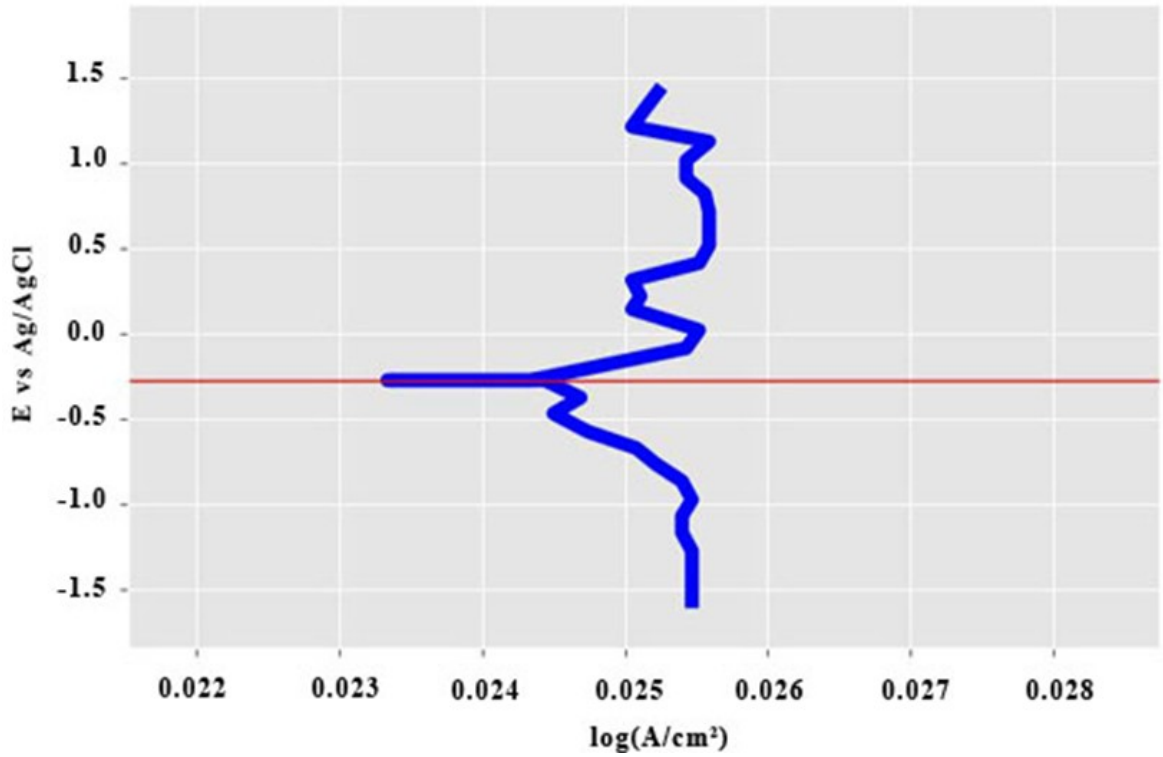

Figure 8: Potentiodynamic polarization behaviour of mild steel in 3.5% NaClat 15 mv/s (Fabricated potentiostat)

veals that the I_{corr} and $E_{corr,}$ are 0.0117A/cm^2 and -1.3327 V respectively and the Polarisation resistance is 5.78 Ω.

The result obtained from Figure 6 of the Tafel extrapolation for mild steel exposed in 0.09M HCl environment at a scan rate of 15mv/s, reveals that the I_{corr} and $E_{corr,}$are 0.0134A/cm^2 and -1.1432V respectively and the Polarisation resistance is 9.86 Ω. Thus comparing the results from the Tafel extrapolation of mild steel exposed in 0.09M HCl at 10 mV/s and 15 mV/s, shows that the little change in scan rate led to changes in the I_{corr}, $E_{corr,}$and slopes of the anodic and cathodic region. Also the high polarization Resistance (R_p) implies high corrosion resistance and low polarization Resistance (R_p) implies low corrosion resistance (Corrosion pedia, 2020).

Figures 7-10 show the Tafel extrapolation for mild steel in 3.5% and 3.65% NaCl solution at 10mV/s and 15 mV/s. The corrosion current density (I_{corr}) and corrosion potential ($E_{corr)}$ gotten using Tafel extrapolation for mild steel in 3.5% NaCl solution at 10mV/s was 0.0244 A/cm^2 and -0.2493 V respectively with the Polarisation resistance of 25.75 Ω. The corrosion current density (I_{corr}) and corrosion potential ($E_{corr)}$ gotten using Tafel extrapolation for mild steel in 3.5% NaCl solution at 15 mV/s were 0.0245 A/cm^2 and -0.2274 V respectively and the Polarisation resistance was 31.16 Ω.

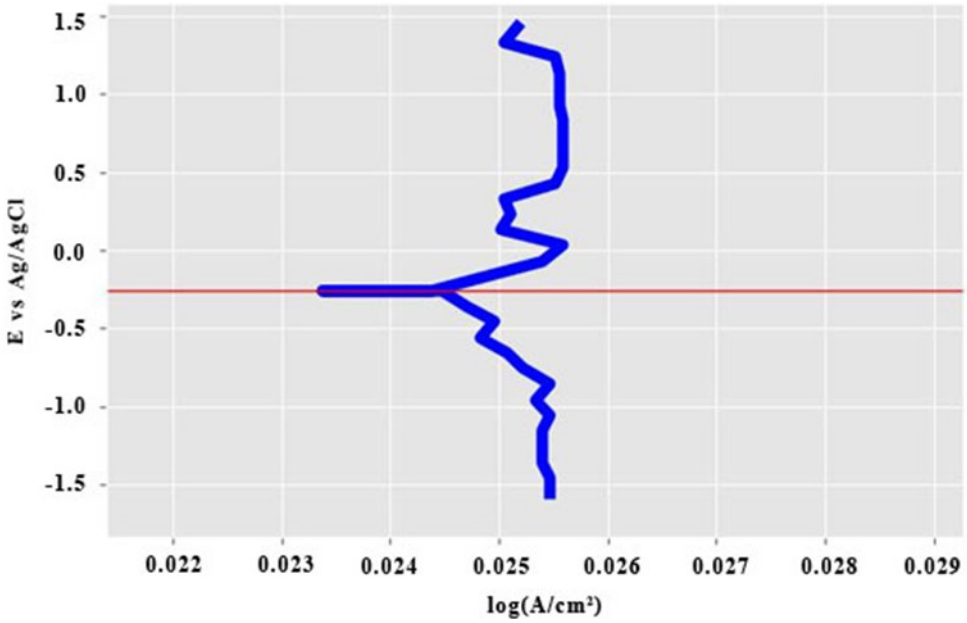

Figure 9: Potentiodynamic polarization behaviour of mild steel in 3.65% NaCl at 10 mv/s (Fabricated potentiostat)

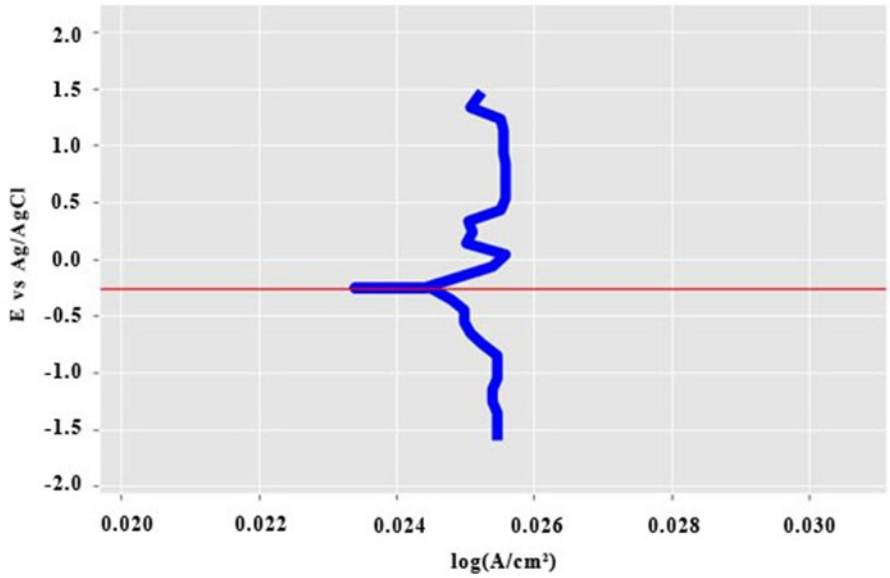

Figure 10: Potentiodynamic polarization behaviour of mild steel in 3.65% NaCl at 15 mv/s (Fabricated potentiostat)

The corrosion current density (I_{corr}) and corrosion potential (E_{corr}) gotten using Tafel extrapolation for mild steel in 3.65% NaCl solution at 10 mV/s were 0.0243 A/cm^2 and -0.4309 V respectively and the Polarisation resistance was 28.9 Ω. The corrosion current density (I_{corr}) and corrosion potential (E_{corr}) gotten using Tafel extrapolation for mild steel in 3.65% NaCl solution at 15mV/s were 0.0245 A/cm^2 and -0.244V respectively and the Polarisation resistance was 31.83 Ω.

From these results it can be deduced that the corrosion rate of 3.5% NaCl is higher than that of 3.65% NaCl solu-

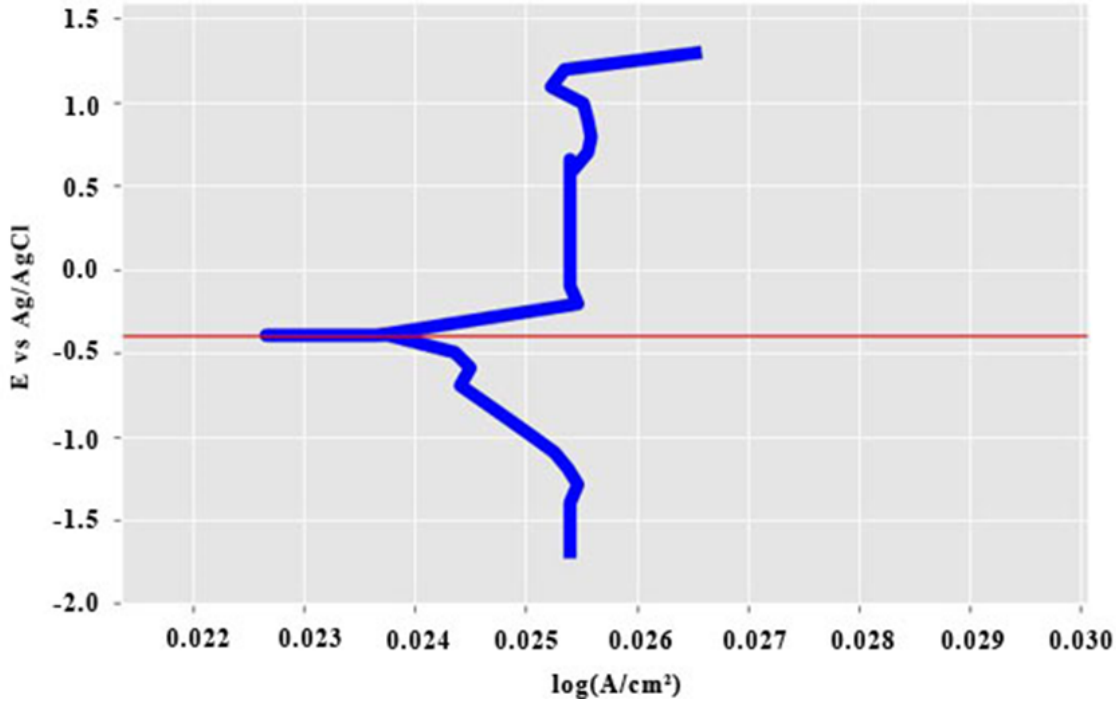

Figure 11: Potentiodynamic polarization behaviour of mild steel in 1M NaOH at 10mv/s (Fabricated potentiostat)

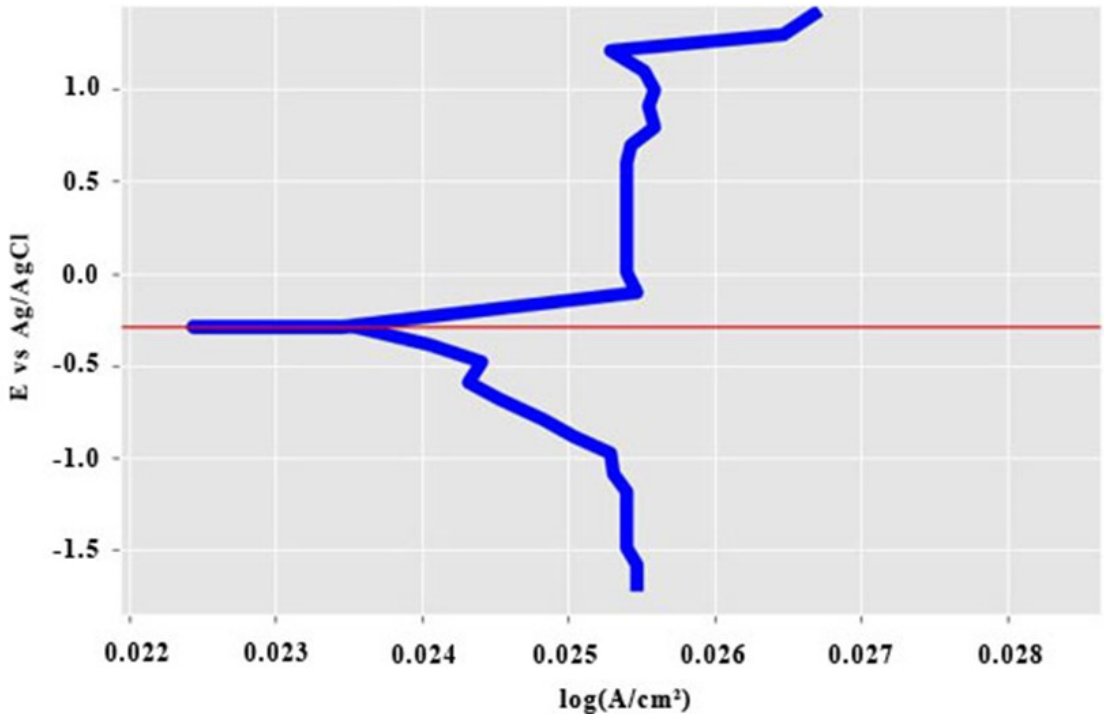

Figure 12: Potentiodynamic polarization behaviour of mild steel in 1M NaOH at 15mv/s (Fabricated potentiostat)

tion, because the high resistance polarization values of 3.65% NaCl implies high corrosion resistance.

The result obtained from Figure 11 of the Tafel extrapolation for mild steel exposed in1M NaOH solution at a scan rate of 10mV/s, shows that the corrosion current density (I_{corr}) and corrosion potential (E_{corr}) were 0.0235 A/cm^2 and -0.2902 V respectively and the Polarisation resistance was 11.51 Ω. The result obtained from Figure 12 of the Tafel extrapolation for mild steel exposed in1M NaOH solution at a scan rate of 15mV/s, shows that the corrosion current density (I_{corr}) and corrosion potential (E_{corr}) were 0.0236 A/cm^2 and -0.3885 V respectively and the Polarisation resistance was 14.37 Ω. It is noteworthy to observe that the polarization resistance increased with increase in scan rate, this isdue to passivation (Pierre and Roberge 1999).

4. CONCLUSIONS

This study designed and constructed a low cost Potentiostat for teaching and research purpose and it was established that:

1. The Potentiostat fabricated was able to measure corrosion rate at a scan rate as low as 8mV/s.
2. The GUI developed could plot corrosion data in real time and also calculate the slope of the anodic and cathodic curve using linear regression (an algorithm in machine learning).
3. The potentiostat was used to characterize mild steel in HCl, NaOH and NaCl solutions and the results were recorded. It can be observed that the corrosion rate of HCl is higher than that of NaOH and NaCl which could be traceable to the aggressive nature of the acid.

5. REFERENCES

B. Aremo, M.O. Adeoye, I.B. Obioh and O.A. Adeboye (2015). A Simplified Microcontroller-Based Potentiostat for Low-Resource Applications. *Open Journal of Metal*, 5, 37-46. Corrosionpedia(2020), Retrieved from Corrosionpedia: https://www.corrosionpedia.com/definition/899/polarization-resistance\

George A., (2013) Corrosion Testing: http://www. corrosionpedia.com/dictionary/tags/corrosion-testing

Ijseling, F. P., General Guidelines for Corrosion Testing of Materials for Marine Applications, London, The Institute of Materials, 2017.

Liu Y., Z. Dong, L. Yu, Y. Liu, H. Li. Influence of aging on shape memory effect and corrosion resistance of a new Fe-Mn-Si-based alloy, *Jr Mater. Resear.*30